"OPTICAL CABLE CORPORATION (OCC) RESERVES THE RIGHT TO REVISE ANY AND ALL DESIGN SPECIFICATIONS."

UNCONTROLLED COPY

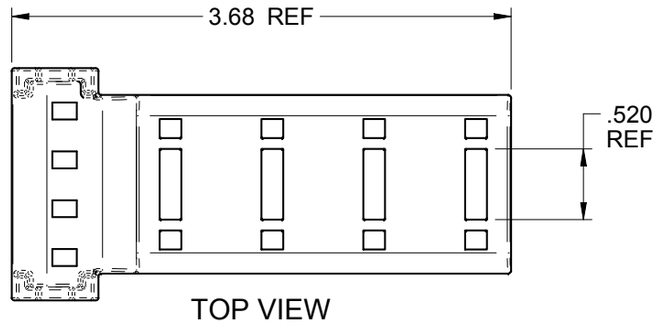

TOP VIEW

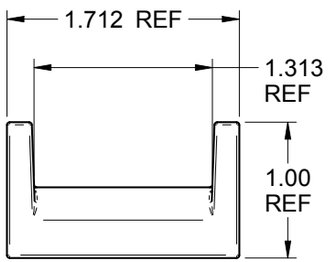

BACK VIEW

RIGHT SIDE

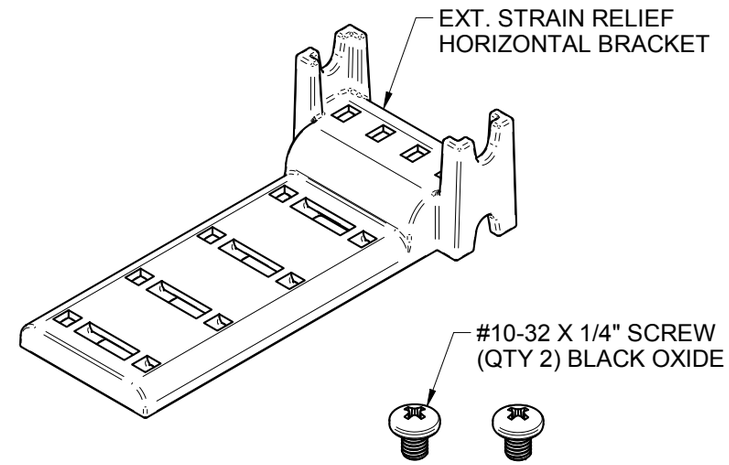

NOTES: UNLESS OTHERWISE SPECIFIED.

1. INCLUDES SUPPLIED HARDWARE, AS SHOWN.

2. MATERIAL: POLYBUTYLENE, BLACK

TCSRB2	KIT, EXTERNAL STRAIN RELIEF BRACKET
OCC PART NO.	DESCRIPTION

UNLESS OTHERWISE SPECIFIED DIMENSIONS ARE IN INCHES.
TOLERANCES: FRACTIONS ±1/32"
ANGLES ±1/2°
3 PLACE DECIMALS ±.005"
2 PLACE DECIMALS ±.01"

THIS DRAWING AND THE DESIGN SHOWN ARE THE PROPERTY OF OPTICAL CABLE CORPORATION AND MAY NOT BE USED AS THE BASIS FOR MANUFACTURE OR SALE WITHOUT SPECIFIC WRITTEN PERMISSION OF OPTICAL CABLE CORPORATION.

OPTICAL CABLE CORPORATION
33 Superior Way
Swannanoa, NC 28778
Phone: 828-298-2260
Fax: 828-298-2487
www.occfiber.com

THIRD ANGLE PROJECTION

MATERIAL: POLYBUTYLENE, BLACK

FINISH: SEE NOTES

CRITICAL DIMENSION CODE
(F) = FUNCTION
(M) = MATING
(A) = AUDIT

DRAWN	D.A.HOLBERT	DATE	9/22/17
CHECKED	J.HOWE	DATE	12/21/17
ENGINEER	J.YANIK	DATE	9/22/17
APPROVED	J.CALLOWAY	DATE	3/22/18
PREVIOUS DWG			
NEXT DWG		FILENAME	C112923A.dft

DWG TITLE: KIT, EXTERNAL STRAIN RELIEF BRACKET, TCSRB2

SIZE: B | DWG NO. C112923 | REV A

SCALE: FULL | SHEET 1 OF 1