"OPTICAL CABLE CORPORATION (OCC) RESERVES THE RIGHT TO REVISE ANY AND ALL DESIGN SPECIFICATIONS."

UNCONTROLLED COPY

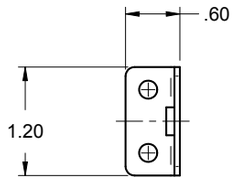

MOUNTING BRACKET

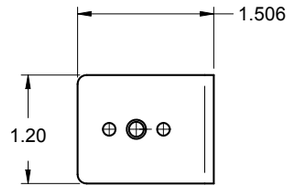

(RIGHT SIDE)

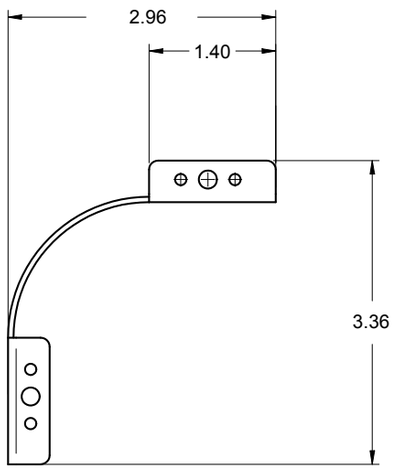

VERTICAL BRACKET

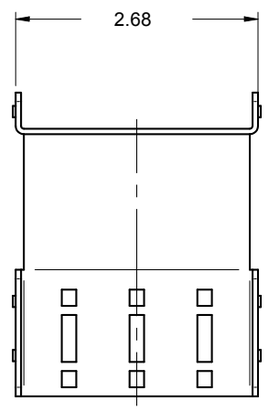

(RIGHT SIDE)

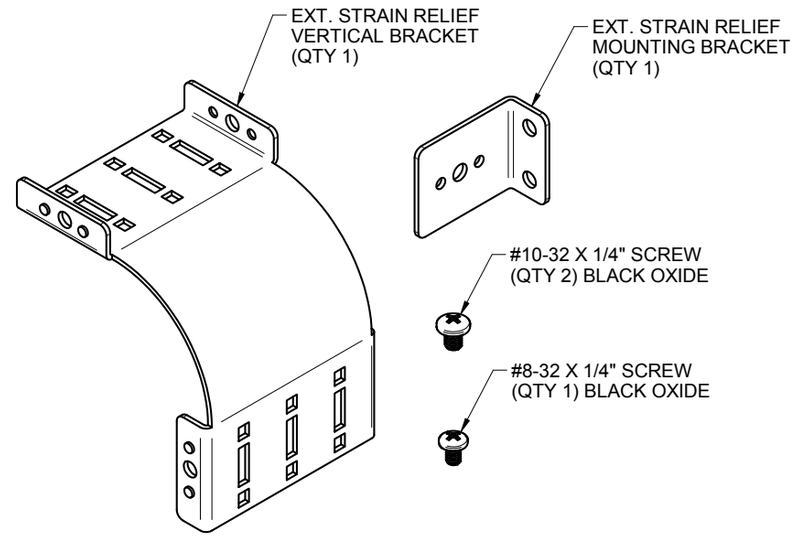

OCC P/N FOCBKTV

NOTES: UNLESS OTHERWISE SPECIFIED.

1. INCLUDES SUPPLIED HARDWARE, AS SHOWN.

FOCBKTV	KIT, EXTERNAL STRAIN RELIEF, VERTICAL ENTRY, BLACK
OCC PART NO.	DESCRIPTION

UNLESS OTHERWISE SPECIFIED DIMENSIONS ARE IN INCHES.
TOLERANCES: FRACTIONS ±1/32"
ANGLES ±1/2°
3 PLACE DECIMALS ±.005"
2 PLACE DECIMALS ±.01"

THIS DRAWING AND THE DESIGN SHOWN ARE THE PROPERTY OF OPTICAL CABLE CORPORATION AND MAY NOT BE USED AS THE BASIS FOR MANUFACTURE OR SALE WITHOUT SPECIFIC WRITTEN PERMISSION OF OPTICAL CABLE CORPORATION.

OPTICAL CABLE CORPORATION
33 Superior Way
Swannanoa, NC 28778
Phone: 828-298-2260
Fax: 828-298-2487
www.occfiber.com

THIRD ANGLE PROJECTION

MATERIAL
SEE BILL OF MATERIAL

FINISH
SEE NOTES

CRITICAL DIMENSION CODE
(F) = FUNCTION
(M) = MATING
(A) = AUDIT

DRAWN	D.A.HOLBERT	DATE	11/7/14
CHECKED	J.HOWE	DATE	1/9/15
ENGINEER	J.YANIK	DATE	11/7/14
APPROVED	CALLOWAY	DATE	8/18/22
PREVIOUS DWG			
NEXT DWG		FILENAME	C112035A.dft

DWG TITLE: KIT, EXTERNAL BRACKET, STRAIN RELIEF, VERT. ENTRY

SIZE: B | DWG NO.: **C112035** | REV: A

SCALE: 1:1.5 | SHEET: 1 OF 1

PROPRIETARY AND CONFIDENTIAL