REVISION HISTORY					
REV	SHT	DESCRIPTION	DATE	ECN	CHECKED
A	ALL	RELEASE NEW	11/28/05	NEW	JY
B	-	ADDED: ISOMETRIC VIEW	8/10/07	-	JY

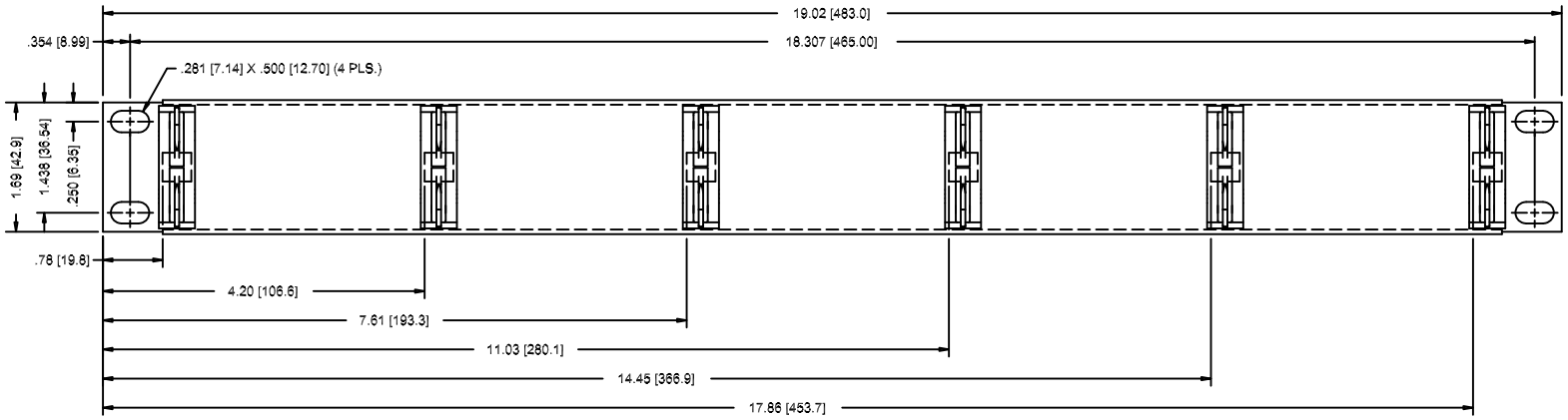

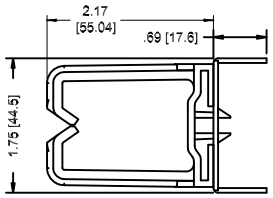

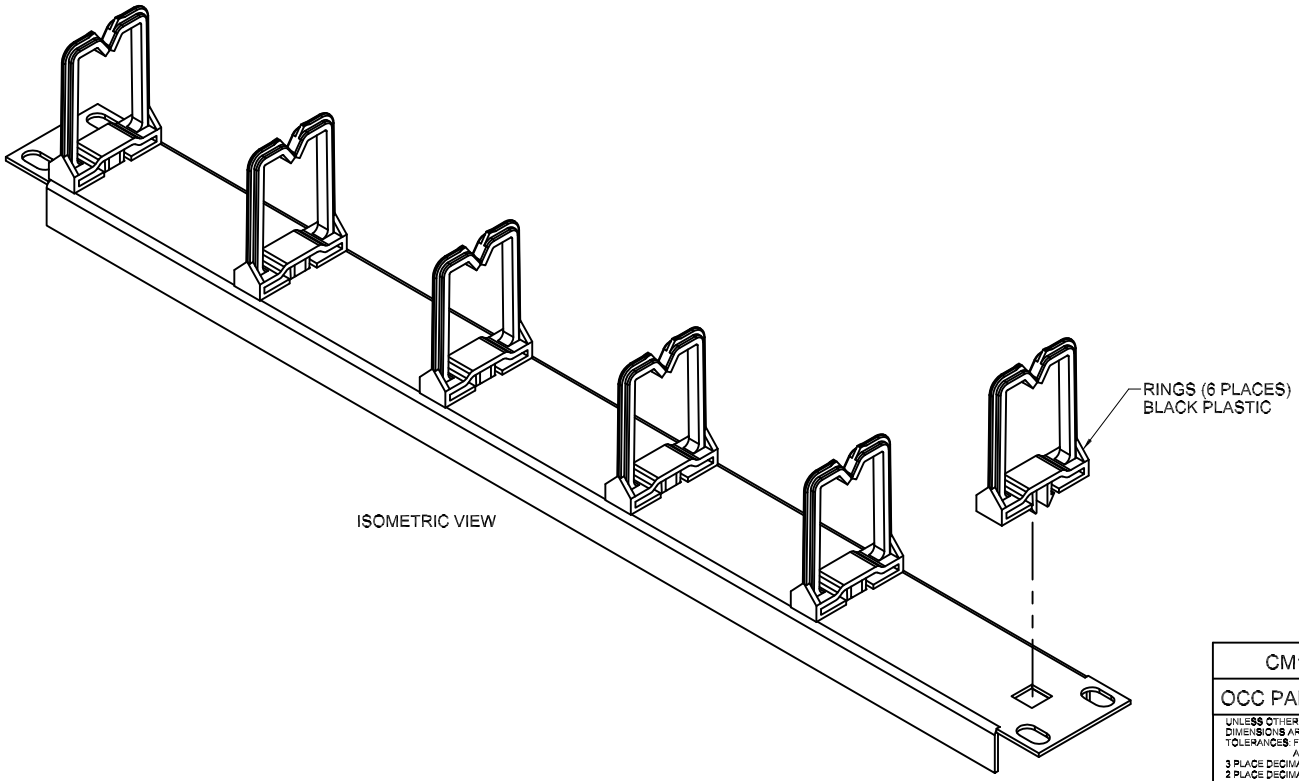

ISOMETRIC VIEW

NOTES: UNLESS OTHERWISE SPECIFIED.
1. DIMENSIONS ARE IN ENGLISH MEASUREMENTS.
DIMENSIONS WITHIN BRACKETS ARE METRIC CONVERSIONS.

UNCONTROLLED COPY

CM101	PANEL, CABLE MANAGEMENT, WITH RINGS, 1RU
OCC PART NO.	DESCRIPTION

UNLESS OTHERWISE SPECIFIED DIMENSIONS ARE IN INCHES. TOLERANCES: FRACTIONS ±1/32" ANGLES ±1/2° 3 PLACE DECIMALS ±.005" 2 PLACE DECIMALS ±.01"

THIS DRAWING AND THE DESIGN SHOWN ARE THE PROPERTY OF OPTICAL CABLE CORPORATION AND MAY NOT BE USED AS THE BASIS FOR MANUFACTURE OR SALE WITHOUT SPECIFIC WRITTEN PERMISSION OF OPTICAL CABLE CORPORATION.

OPTICAL CABLE CORPORATION
5290 Concourse Drive
Roanoke, VA 24019
Phone: 800-622-7711
Fax: 540-265-0724
www.occfiber.com

THIRD ANGLE PROJECTION

CRITICAL DIMENSION CODE
(F) = FUNCTION
(M) = MATING
(A) = AUDIT

MATERIAL: PANEL: 16 GA CRS (.060 THK REFERENCE)

FINISH: PAINTED: BLACK POWDERCOAT WRINKLE PER SMP SPEC 10002512

DRAWN	K.MORRELL	DATE	11/28/05
CHECKED	J.YANIK	DATE	8/10/07
ENGINEER	J.YANIK	DATE	11/28/05
APPROVED	J.YANIK	DATE	8/10/07
PREVIOUS DWG			
NEXT DWG		FILENAME	C300154B.dft

DWG TITLE: PANEL, CABLE MGMT, 1RU, WITH RINGS

SIZE: C | DWG NO. C300154 | REV B

SCALE: NONE | SHEET 1 OF 1